EC-PG805-05 TTL Incremental Encoder PG

Expansion Module User Manual

Preface

Thank you for choosing INVT EC-PG805-05 TTL incremental encoder PG expansion module.

The EC-PG805-05 TTL incremental encoder PG expansion module is used with the GD880 series VFD control box to detect the TTL or RS422 incremental encoder. The expansion module monitors the rotational speed of the motor by detecting the output signal of the encoder, providing real-time speed feedback for precise speed control.

This manual describes the product overview, installation, wiring, and commissioning instructions. Before installing the VFD, read through this manual carefully to ensure the proper installation and running with the excellent performance and powerful functions into full play.

Product features:

- Incremental encoder multi-channel signal detection: IA+, IA -, IB+, IB -, IZ+, IZ-
- Provides power supply for encoders: 5V±5%/150mA
- Supports two input signal types: TTL differential signal input, RS422 signal input
- Supports pulse reference and frequency division output
- With the encoder disconnection detection function, avoiding the expansion of system fault impact
- Able to detect the motor temperature through the KTY84/PT100 temperature sensor signal
- Adopts digital filtering technology to improve electromagnetic compatibility and realize long-distance stable reception of encoder signals

1 Product overview

1.1 Model description

Figure 1-1 Product nameplate and model

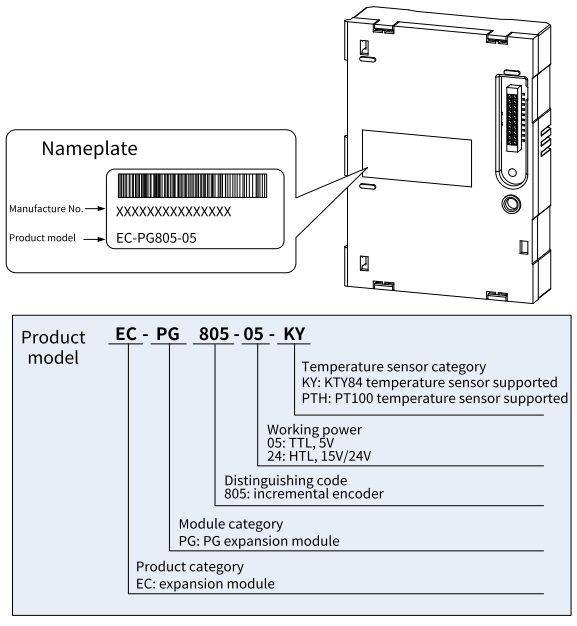

1.2 Specifications

Table 1-1 Specifications

Parameters	Specification
Working temperature	-10–+50°C
Storage temperature	-20–+60°C
Relative humidity	5%–95% (No condensation)
Running environment	No corrosive gas
Installation method	Fixed with snap-fits and screws
Ingress protection (IP) rating	IP20
Heat dissipation method	Natural air cooling

1.3 Technical parameters

Table 1-2 Technical parameters

Parameters	Specification
Output voltage/current	5V±5%/150mA
Encoder input signal type	TTL differential or RS422 signal
Pulse reference signal type	Differential
Pulse reference signal voltage	5V ± 5%
Pulse reference max. signal frequency	400kHz
Frequency-divided output type	Differential output
Frequency-divided output signal voltage	5V ± 5%
Frequency division coefficient	1:255
Max. frequency-divided output frequency	400kHz
Temperature detection	Supporting KTY84 or PT100 temperature detection
Disconnection detection	Supported

Note: Disconnection detection function is only supported when the motor is running.

1.4 Structure

Figure 1-2 Component diagram

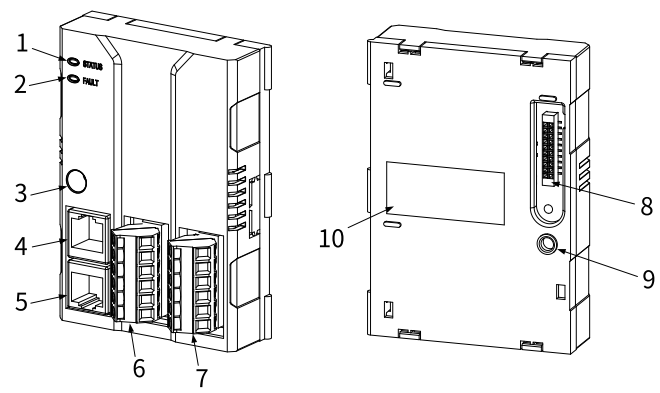

Table 1-3 Component description

No.	Name	Description
1	STATUS Status indicator (green)	On: The expansion module is connecting with the control box. Blinking (On: 500ms; Off: 500ms): The expansion module is connected with the control box. Off: The expansion module is disconnected from the control box.
2	FAULT Encoder signal indicator (red)	On: Encoder is faulty. Off: Encoder is normal.
3	Installation fixing hole	To fix the expansion module and maintain a good connection of the PE layer.
4	X1 – frequency-divided output RJ45	Frequency-divided output
5	X2 – Pulse reference RJ45	Pulse reference
6	X3 – Encoder power selection terminal	6PIN pluggable green terminal for encoder power output, KTY84 or PT100 signal input
7	X4 – Encoder signal input terminal	6PIN pluggable blue terminal for TTL incremental encoder differential signal input
8	Connection port	For electrical connection with the control box.
9	Positioning hole	To align the expansion module and control box for easy installation
10	Nameplate	Including the model and sequence number of the expansion module

2 Installation and wiring

2.1 Installation precautions

⚠	Make sure the device have been powered off before installation.
Note	The PG expansion module is recommended to be placed on expansion slot 1. If there is a second PG expansion module, it can be placed in other interfaces (expansion slot 2, expansion slot 3).

Required tools: Phillips screwdriver PH1, straight screwdriver SL3

Table 2-1 Screw torque requirements

Screw size	Fastening torque
M3	0.55 N・m

2.2 Dimensions

The dimensions of the PG expansion module is 73.5×103×34 mm (W*H*D).

Figure 2-1 Product outline and mounting dimensions diagram (unit: mm)

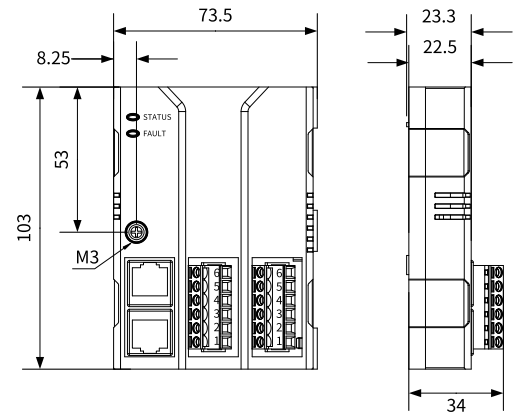

2.3 Installation instructions

It is recommended to place the PG expansion module at expansion slot 1 of the control box. The following is an example of the installation at slot 1.

Step 1 Place the expansion module in the corresponding position of the control box expansion slot 1, align it with the slot, and then buckle it together.

Step 2 Align the expansion module positioning hole with the positioning stud.

Step 3 Fix with a M3 screw. The installation is complete.

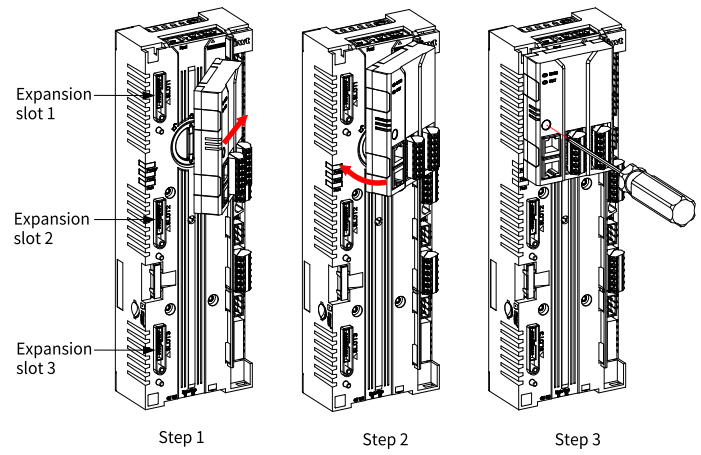

Note:

- The expansion module and control box are electrically connected through slots. Please install them in place.
- To ensure the reliable operation of the expansion module and meet EMC requirements, please tighten the screws according to the recommended torque for reliable grounding.

2.4 Disassembly instructions

You can disassembly the module by reversing the order of steps described in section 2.3 Installation instructions.

Step 1 Disconnect all power supplies and disassemble all cables connected to the expansion module.

Step 2 Use a Phillips screwdriver PH1 to remove the grounding screws of the expansion module.

Step 3 Lift the expansion module out of the control box positioning stud and pull it out to a suitable position. Disassembly is complete.

2.5 User's wiring terminal

Figure 2-2 Product appearance diagram

Table 2-2 X3 terminal function definition

X3 terminal	Terminal definition	Description	Specifications
X3-6	PWR	Encoder power	Voltage: 5V ± 5% Max. output current: 150mA
X3-5	GND		Encoder power ground
X3-4	KTY84/PTA	KTY84/PT100 temperature sensor interface	When the KTY84 or PT100 two-wire system is used, short circuit PTB and PTC. (They are short connected by default.) When the PT100 two-wire system is used, PTB and PTC do not need to be shorted.
X3-3	PTB	PT100 temperature sensor interface	
X3-2	PTC	PT100 temperature sensor interface	
X3-1	PE	Grounding terminal	Shield ground

Note:

- The part number of the PG extension module that supports KTY84 type and that supports PT100 type are different. Please note this when placing an order.
- The PG expansion module supports one PT100 or three PT100 for use in series.

Table 2-3 X4 terminal function definition

X4	Terminals	Specifications
X4-6	IA+	Encoder interface: Eight-core shielded twisted-pair cable is recommended.
X4-5	IA-	
X4-4	IB+	
X4-3	IB-	
X4-2	IZ+	
X4-1	IZ-	

Table 2-4 Function definition of RJ45 interfaces X1–X2

Interface definition	X1 frequency-divided output interface pin	X2 pulse reference interface pin
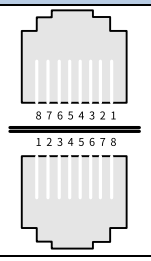	X1-1: OA+	X2-1: IA1+
	X1-2: OA-	X2-2: IA1-
	X1-3: OB+	X2-3: IB1+
	X1-4: OZ+	X2-4: IZ1+
	X1-5: OZ-	X2-5: IZ1-
	X1-6: OB-	X2-6: IB1-
	X1-7: GND	X2-7: GND
	X1-8: n/c	X2-8: +5V

Figure 2-3 External wiring diagram when using EC-PG805-05

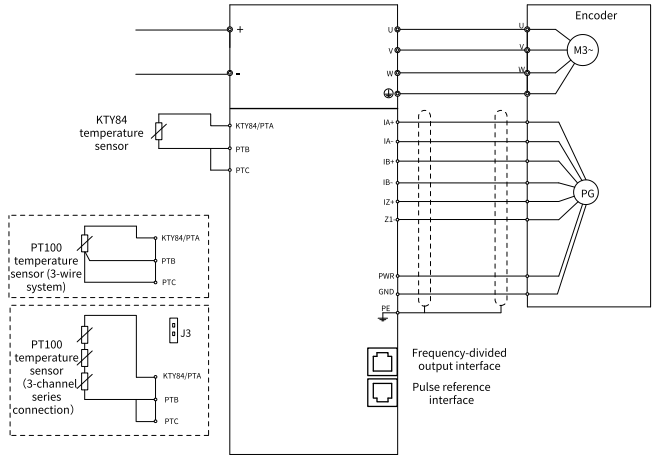

Note: For the PT100 temperature sensor application (in a 3-channel series connection), J3 should be shorted.

2.6 Wiring precautions

Note:

- For the encoder wiring inside the cabinet, separate them from strong interference cables (like power cables) with a recommended interval of 30cm.
- For the encoder wiring outside the cabinet, avoid parallel wiring with the power cable and avoid forming a ring shape. If conditions permit, it is recommended to use a metal conduit for wiring.
- To ensure high anti-interference capability in closed-loop control, you need to use a shielded wire for encoder cables and ground both ends of the cable, that is, connect the shielding layer on the motor side to the motor housing and connect the shielding layer on the PG module side to the PE terminal.

3 Commissioning instruction

Figure 3-1 PG module configuration flowchart

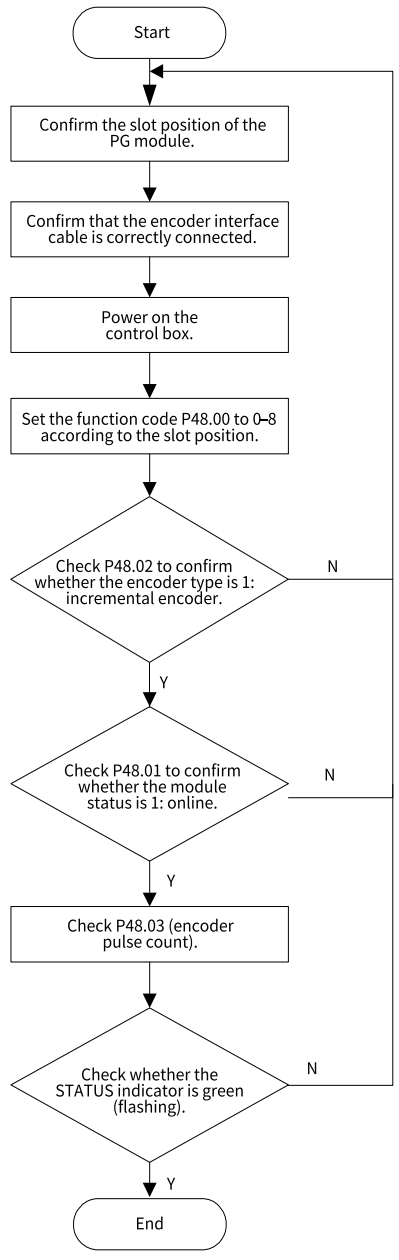

Table 3-1 Function code parameters related to PG expansion module

Function code	Name	Description		Range	Default
P48.00	Module slot enabling	0: SLOT1 1: SLOT2 2: SLOT3 3: SLOT2-1 4: SLOT2-2 5: SLOT2-3 6: SLOT3-1 7: SLOT3-2 8: SLOT3-3 9: Invalid		0–9	9
P48.01	Module online status	Bit0–Bit8	Module online status of expansion slot 1 0: Offline 1: Online	0–1	0x000
P48.02	Encoder type display	0: Invalid 1: Incremental encoder 2: Resolver-type encoder 3: Sin/Cos encoder 4: Endat absolute encoder 5: Incremental encoder with UVW		0–5	0
P48.03	Encoder pulse count (pulse-per-revolution)	0–60000		0–60000	1024
P48.66	Handling mode of PG card disconnection fault	0: Fault 1: Alarm (Used during open/closed loop switchover) 2: Ignore		0–2	0

Note: For other parameter settings of the EC-PG805-05 TTL incremental encoder PG expansion module, see software manuals of the GD880 series inverter unit.

66001-01189

产品在改进的同时，资料可能有所改动，恕不另行通知。版权所有，仿冒必究。

202510 (V1.1)